WMH-F 1528-2528-1932-2532-1638-2038-1543-1843

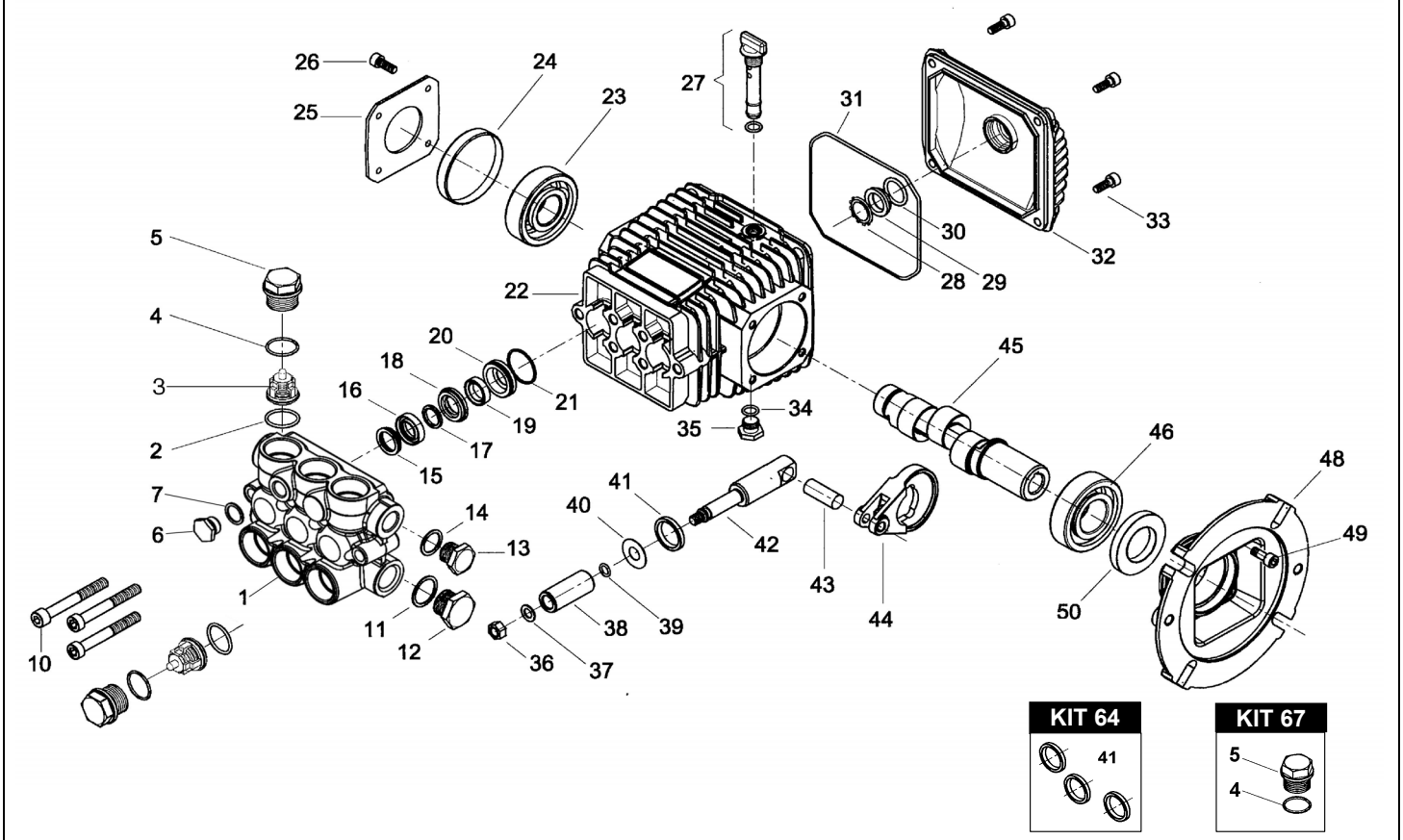

KIT 73

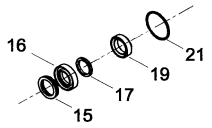

KIT 68

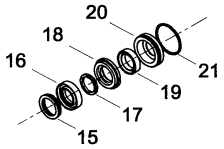

KIT 124

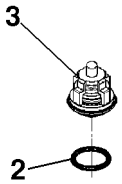

KIT 80

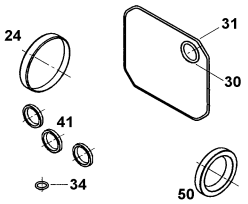

POS.	CODICE PART NO. RÉF.	DENOMINAZIONE - DESCRIPTION - DESCRIPTION	Q.TY
1	040473282	PUMP HEAD DIA.15 MM (FROM 18/04/2011)	1
1	040119282	PUMP HEAD DIA.15 MM (BEFORE 18/04/2011)	1
2-kit 124	803182002	O-RING DIA.2,62X17,13	6
3-kit 124	049887973	CHECK VALVES	6
4-kit 67	803182002	O-RING DIA.2,62X17,13	6
5-kit 67	070040532	VALVE CAP M27x1,5	6
6	852543502	CAP G.1/4" (FROM 18/04/2011)	1
7	824079002	COPPER WASHER (FROM 18/04/2011)	1
10	862892002	BOLT M8X50 UNI 5931 (FROM 18/04/2011)	6
10	862945002	BOLT M8X60 UNI 5931 (BEFORE 18/04/2011)	6
11	824140002	GASKET	1
12	852629002	PLUG G 1/2	1
12	852629532	PLUG G 1/2 BRASS (OPTIONAL)	1
13	852579002	PLUG G 3/8	1
13	852579532	PLUG G 3/8 BRASS (OPTIONAL)	1
14	824109002	COPPER GASKET DIA.17X22X1	1
15-kit 68-73	040270322	THRUST RING	3
16-kit 68-73	802020002	"V" PACKING D.15	3
17-kit 68-73	040269322	ANTI-EXTRUSION RING	3
18-kit 68	040268532	FRONT GLAND	3
19-kit 68-73	802034002	U PRESSURE SEAL DIA.15X22X5,5	3
20-kit 68	040166532	BACK GLAND	3
21-kit 68-73	803073002	O-RING DIA.23,52X1,78	3
22	040110092	CRANKCASE	1
23	812725002	BALL BEARING	1
24-kit 80	802101002	CAP	1
25	050045612	CRANKCASE COVER	1
26	862108002	BOLT M6X16 UNI 5931	4
27	049832973	OIL FILLER PLUG	1
28	801184002	SNAP RING	1

POS.	CODICE PART NO. RÉF.	DENOMINAZIONE - DESCRIPTION - DESCRIPTION	Q.TY
29	040120322	OIL SIGHT GLASS	1
30-kit 80	803189002	O-RING DIA.2,62X18,72	1
31-kit 80	803210682	O-RING D.2,62X120,32	1
32	040117092	REAR COVER	1
33	862168002	GALVANISED BOLT M6X22 UNI 5931	4
34-kit 80	803057002	O-RING 2037 - 39,34 X 2,62	1
35	852543502	CAP G.1/4 X9	1
36	814561002	NUT	3
37	843642902	WASHER DIA.8,1X14X1	3
38	040010182	CERAMIC PISTON DIA.15 MM.	3
39	803049002	O-RING DIA.1,78X5,28	3
40	843726002	WASHER DIA.9,1X24X1	3
41-kit 64-80	802035002	OIL SEAL DIA.15X24X5	3
42	040107512	PLUNGER ROD	3
43	852003002	PISTON PIN DIA.8X25	3
44	040116112	BRONZE CONROD	3
45/1	040128262	HOLLOW CRANKSHAFT WMH-F 1528-252	1
45/2	040141262	HOLLOW CRANKSHAFT WMH-F 1932-253	1
45/3	040142262	HOLLOW CRANKSHAFT WMH-F 1638-203	1
45/4	040143262	HOLLOW CRANKSHAFT WMH-F 1543-184	1
46	812750002	BALL BEARING 30X62X16	1
48	040330092	ELECTRIC MOTOR FLANGE NEMA 56/C	1
49	862168002	GALVANISED BOLT M6X22 UNI 5931	4
50-kit 80	802125502	OIL SEAL	1

REPAIR KIT	ITEM NO.s INCLUDED		PCS.
kit 64	049836973	SPARE PARTS KIT	3
kit 67	049839973	SPARE PARTS KIT	12
kit 68	049840973	SPARE PARTS KIT	21
kit 73	049843973	SPARE PARTS KIT	15
kit 80	049844973	SPARE PARTS KIT	8
KIT 124	049890973	SPARE PARTS KIT	12