TML-HP 1228 - 1328 - 1528 - 1728 - 2028

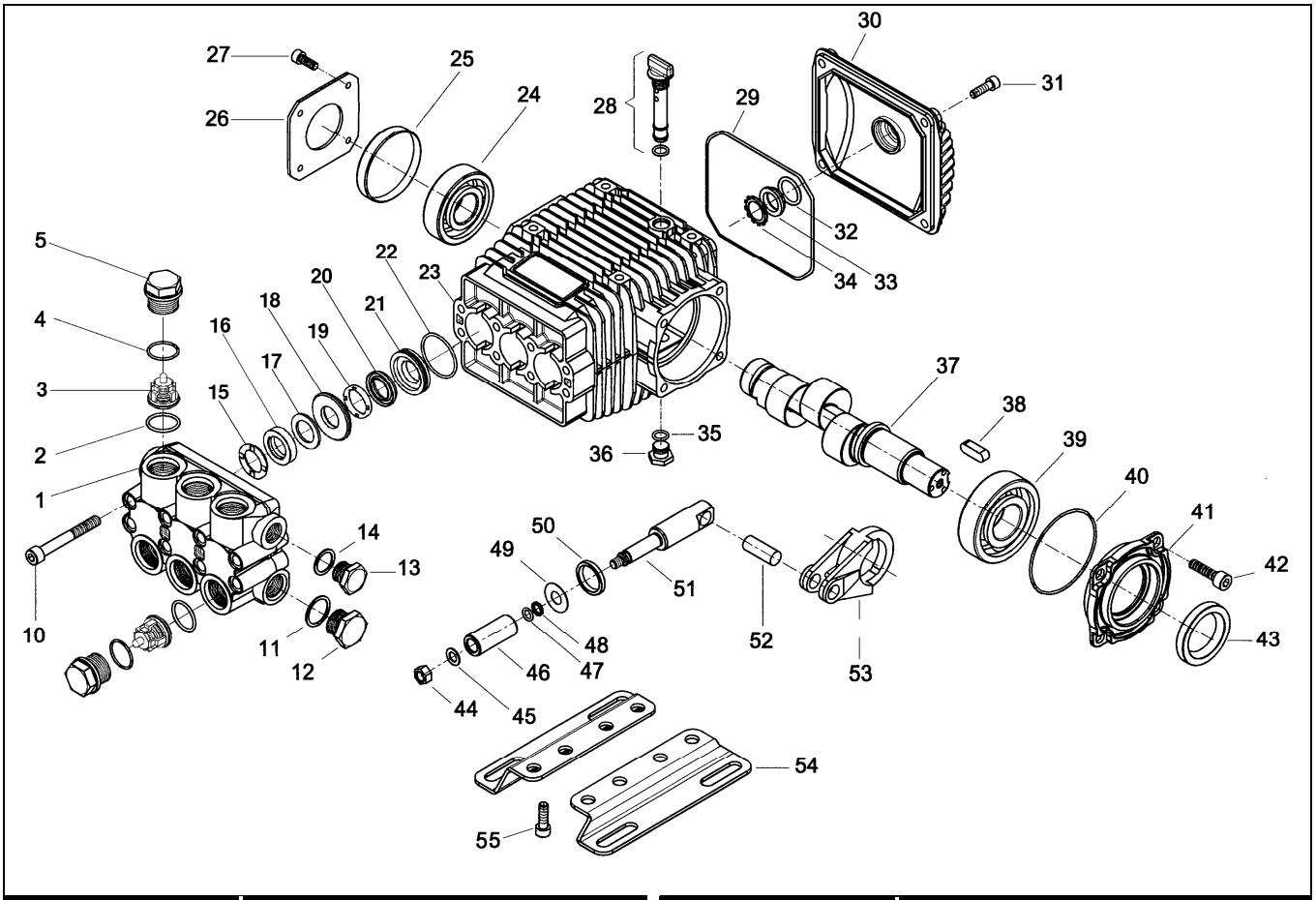

KIT 179

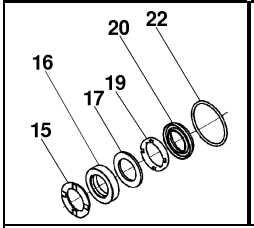

KIT 178

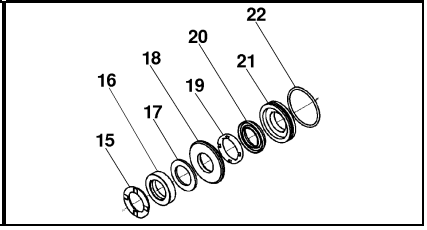

KIT 123

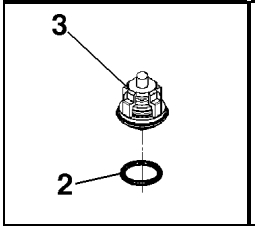

KIT 77

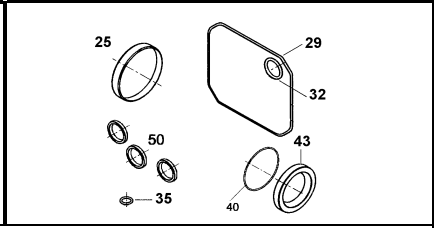

POS.	CODICE PART NO. RÉF.	DENOMINAZIONE - DESCRIPTION - DESCRIPTION	Q.TY
1	070136282	PUMP HEAD	1
2-kit 123	803182802	O-RING DIA.2,62X17,13	6
3-kit 123	069846973	CHECK VALVES	6
4-kit 67	803182802	O-RING DIA.2,62X17,13	6
5-kit 67	070040532	EX. DEEP SEALING VALVE CAP M27x1,5	6
10	862985002	SCREW TCEI M8X70 UNI 5931	8
11	824140002	GASKET FOR COUPLING 21,2X26X1	1
12	852629002	PLUG G 1/2"	1
12	852629532	PLUG G 1/2" BRASS (OPTIONAL)	1
13	852579002	PLUG G 3/8	1
13	852579532	PLUG G 3/8 BRASS (OPTIONAL)	1
14	824109002	COPPER GASKET DIA.17X22X1	1
15-kit 178-179	802061502	SEAL PACKER DN 18/28	3
16-kit 178-179	802061602	U PACKING DIA.18X28	3
17-kit 178-179	802061702	ANTIEXTRUSION RING	3
18-kit 178	070133532	FRONT GLAND D.18	3
19-kit 178-179	050019322	SEAL PACKER DN 18/28	3
20-kit 178-179	802061002	V PACKING DIA.18X28X5,5	3
21-kit 178	070135532	REAR GLAND D.18	3
22-kit 178-179	803080002	O-RING	3
23	070001092	CRANKCASE	1
24	812730102	ROLLER BEARING	1
25-kit 77	802102002	COVER 62X07 RCA	1
26	050045612	CRANKCASE COVER	1
27	862108002	SCREW M6X16 UNI 5931	4
28	049832973	FILLER PLUG	1
29-kit 77	803210682	O-RING D.2,62X120,32	1
30	040117092	REAR COVER	1
31	862168002	GALVANISED SCREW M6X22 UNI 5931	4
32-kit 77	803189002	O-RING DIA.2,62X18,72	1
33	040120322	OIL SIGHT GLASS	1
34	801184002	RING	1

POS.	CODICE PART NO. RÉF.	DENOMINAZIONE - DESCRIPTION - DESCRIPTION	PCS.
35-kit 77	803057002	O-RING 2037 - 39,34 X 2,62	1
36	852543502	CAP G.1/4 X9 (EX 852542002) (EX 852542002)	1
37/1	070033262	CRANKSHAFT TML-HP 1228	1
37/2	070034262	CRANKSHAFT TML-HP 1328	1
37/3	070035262	CRANKSHAFT TML-HP 1528	1
37/5	070037262	CRANKSHAFT TML-HP 1728	1
37/6	070038262	CRANKSHAFT TML-HP 2028	1
38	806534002	TAB 8X7X35	1
39	812776202	ROLLER BEARING	1
40-kit 77	803080702	O-RING D.1,78X69,57	1
41	070003092	SUPPORT	1
42	862547002	SCREW M8X18	4
43-kit 77	802119002	OIL SEAL 30X52X7	1
44	070129512	STAINLESS STEEL NUT M8	3
45	843692002	WASHER DIA.8,2X17X1	3
46	070008182	CERAMIC PISTON DN18	3
47	803055502	VITON O-RING DIA.1,78X7,76	3
48	803912002	BACKUP RING 2031 DIA.10,8	3
49	843826002	WASHER D.11,3X25X0,5 COPPER	3
50-kit 65-77	802063502	AXIAL RING	3
51	070010512	Guide X D.18	3
52	852006282	PISTON PIN	3
53	070005112	CONROD	3
54-optional	040247612	MOUNTING RAIL	2
55-optional	862495002	SCREW M8x16	4
56-optional	079802973	MOUTING RAIL KIT	1

REPAIR KIT	ITEM NO.s INCLUDED		PCS.
kit 65	049837973	SPARE PARTS KIT	3
kit 67	049839973	SPARE PARTS KIT	12
kit 178	079843973	SPARE PARTS KIT	24
kit 179	079844973	SPARE PARTS KIT	18
kit 77	079808973	SPARE PARTS KIT	9
kit123	069867973	SPARE PARTS KIT	12
HOT WATER CONVERSION KIT (85°C-185°F)			
kit 198	079827973	H.W. PACKING SEALING KIT	21
kit 249	069956973	H.W. VALVE KIT	18

BERTOLINI pumps